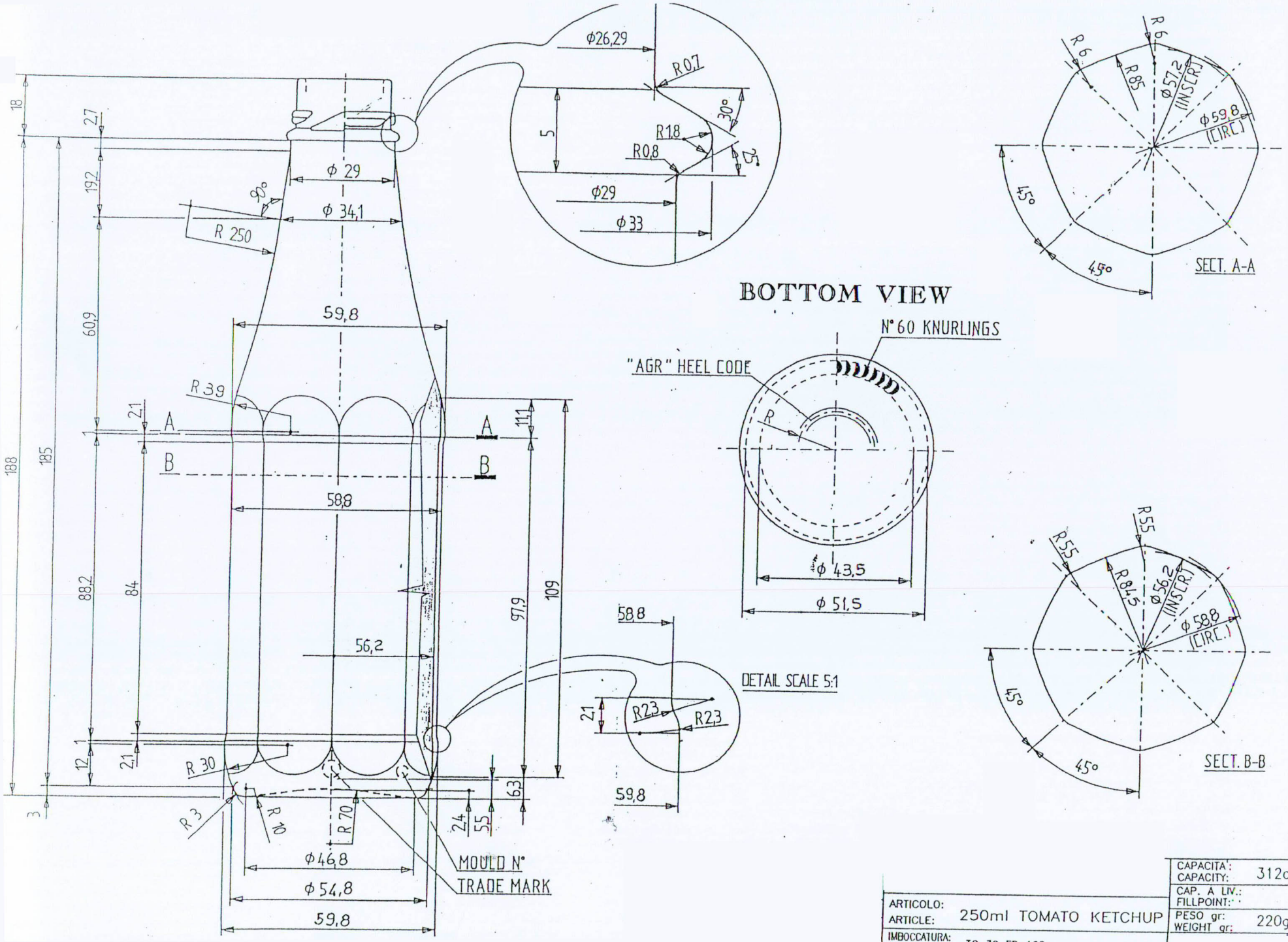

ARTICOLO: ARTICLE:	250ml TOMATO KETCHUP
IMBOCCATURA: FINISH:	TO 30 FD 169
CAPACITA': CAPACITY:	312cc
CAP. A LIV.: FILLPOINT:	
PESO gr: WEIGHT gr:	220g ~